ASSESSMENT-1

K. R. MANGALAM UNIVERSITY
BTech (AI & ML) SOET
(School of Engineering and Technology)

NAME: NYASHA DAS

ROLL NO: 2301730085

COURSE: Computer Networks

Course Code: (ENCS352)

K. R. MANGALAM UNIVERSITY, SOHNA ROAD

GURUGRAM, HARYANA

Experiment Objectives:

In this experiment, students will create three small LAN designs in Cisco Packet Tracer to understand how network topology influences connectivity, fault tolerance, and performance. Students will configure end devices with IPv4 addressing and verify communication using ICMP.

Learning Outcomes

- Create small networks in **Packet Tracer** using different network topologies
- Assign **IPv4 addresses** correctly and verify connectivity
- Identify possible **failure points** in various physical network layouts
- Compare **topology behavior** using results from **Simulation Mode**

Concepts Used

- **Star topology**, **Hub-based topology**, and **Loop (ring-like) topology**
- **IPv4 addressing and subnetting**
- **ICMP ping** for connectivity testing
- **Packet Tracer Simulation Mode**

TASK 1: STAR TOPOLOGY (SWITCH)

TOPOLOGY:

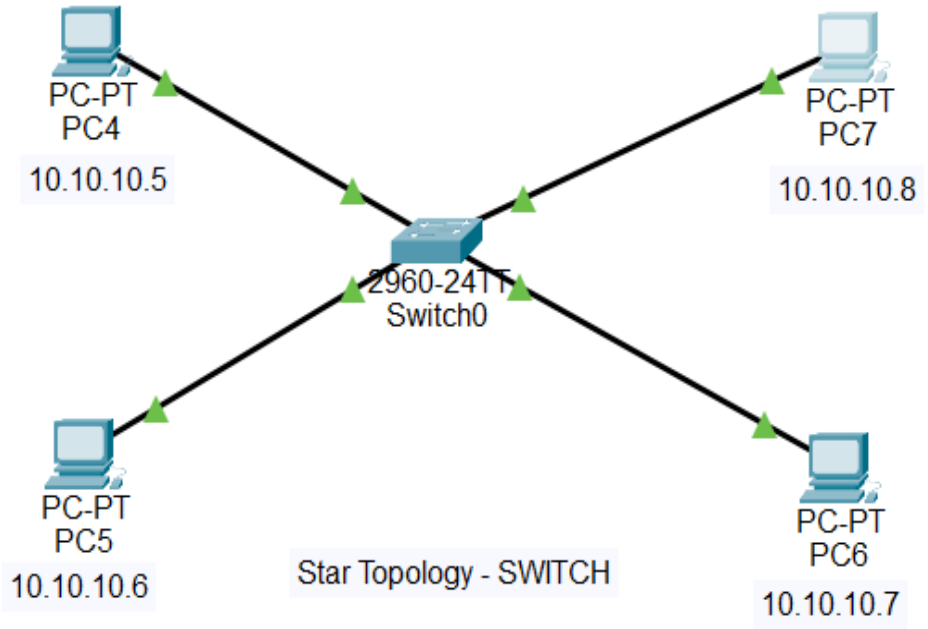

OUTPUT:

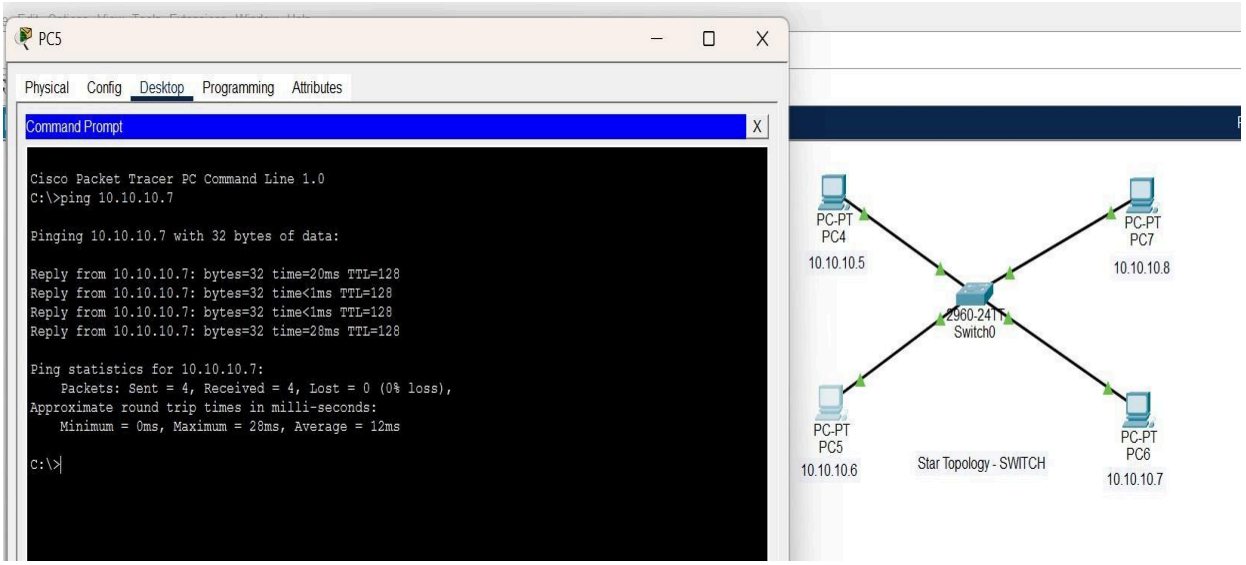

SIMULATION:

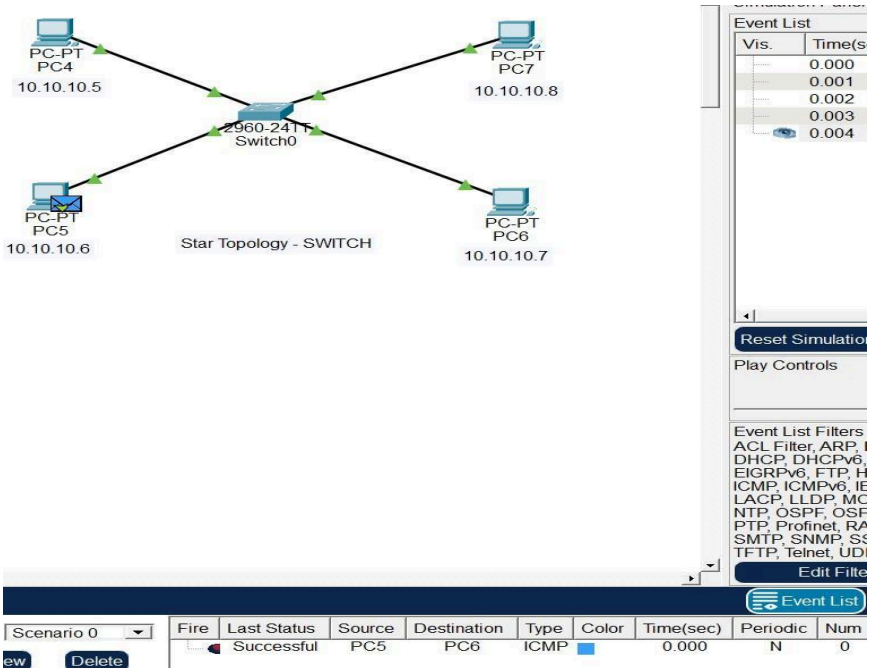

- **Behavior (Normal Working)**

All PCs communicate through the switch, which forwards data only to the intended destination using its MAC address table. ICMP ping between devices is successful, showing fast and collision-free communication.

- **In Failure**

If a single PC or its connecting cable fails, only that device is affected while the rest of the network continues to work normally. However, failure of the central switch causes the entire network to stop functioning.

- **Practical Applications (LAN Design)**

This topology is widely used in office LANs, computer labs, and educational institutions where reliable and fast communication is required. It is suitable for environments that need easy expansion and centralized management.

- **Conclusion**

Switch-based star topology offers reliable, efficient, and scalable network communication. Because of its performance and fault isolation, it is the preferred choice for modern LAN design.

TASK 2: BUS TOPOLOGY (HUB)

TOPOLOGY:

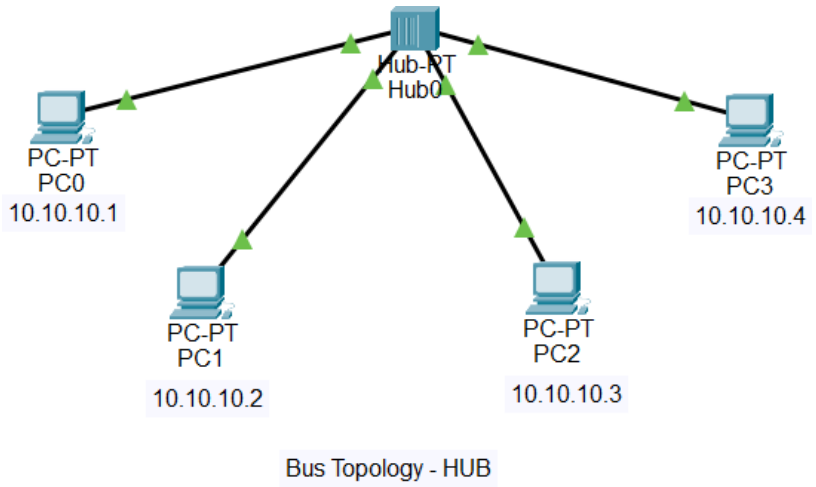

OUTPUT:

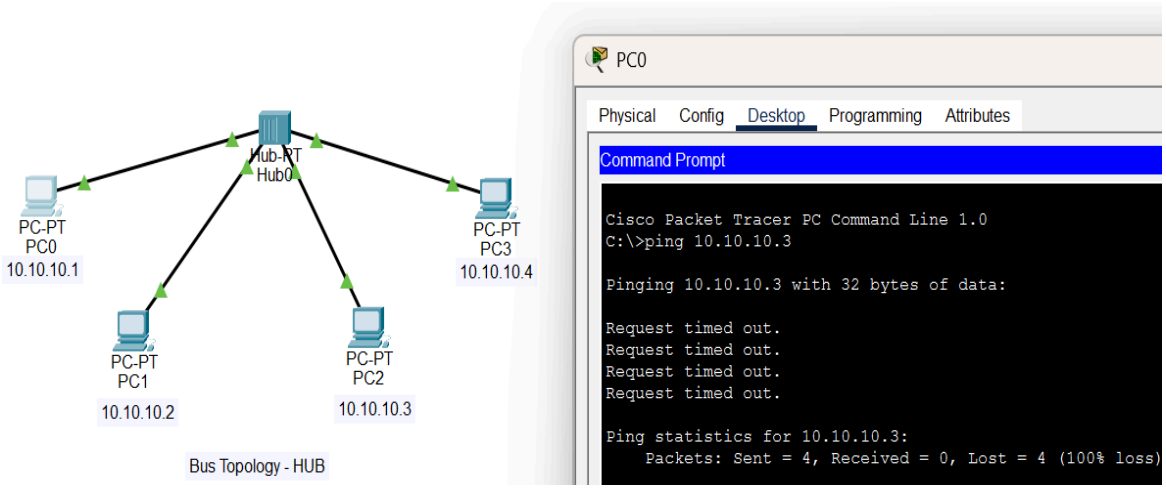

SIMULATION:

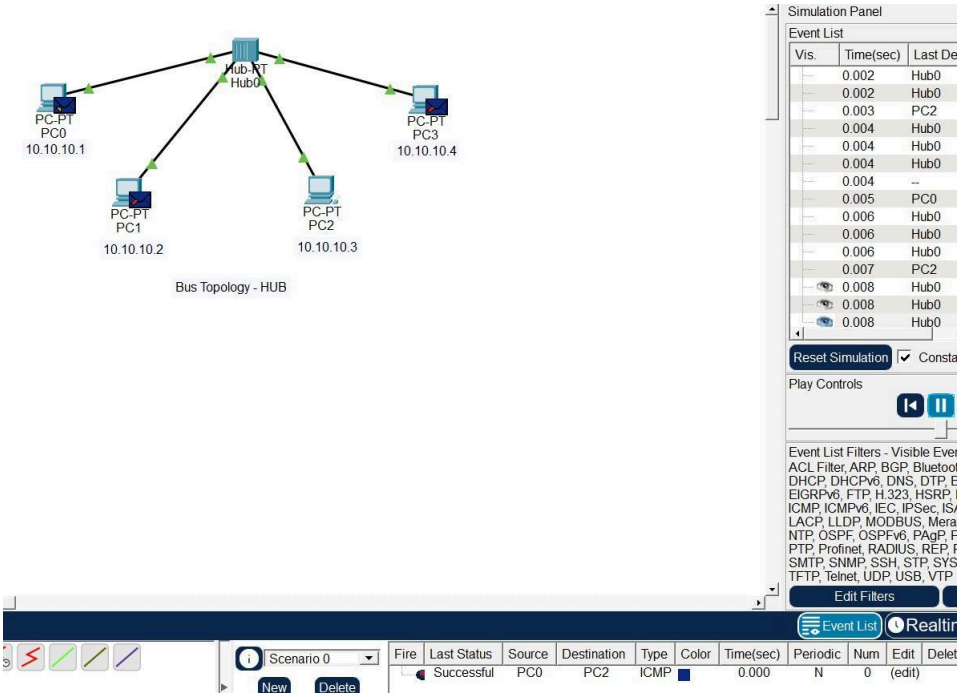

- **Behavior (Normal Working)**

When a PC sends data, the hub broadcasts the packet to all connected devices, regardless of the destination. ICMP pings are successful, but every device receives the packet even if it is not the intended receiver.

- **Failure Behavior**

If one PC fails or its cable is disconnected, the remaining devices can still communicate normally. However, if the hub fails, **the entire network stops functioning** because all communication depends on the hub.

- **Practical Applications (LAN Design)**

Hub-based networks were used in **early small office or home LANs** with limited devices. Today, they are mainly used for **learning and demonstration purposes** rather than real deployments.

- **Conclusion**

Bus-like topology using a hub allows basic network communication but provides poor performance and reliability. Due to these limitations, it has been largely replaced by switch-based star topology in modern LANs.

TASK 3: RING TOPOLOGY (LOOP)

TOPOLOGY:

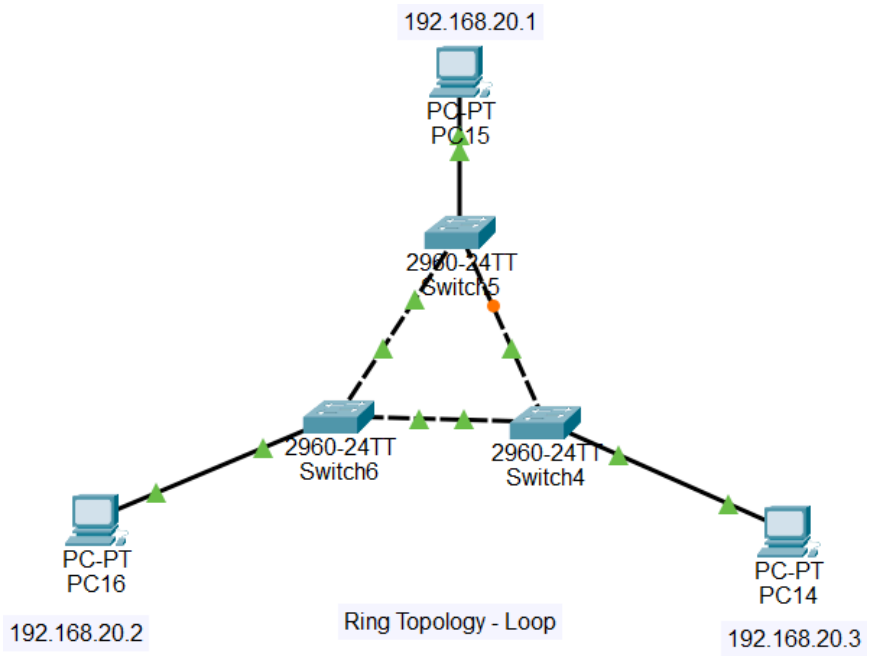

OUTPUT:

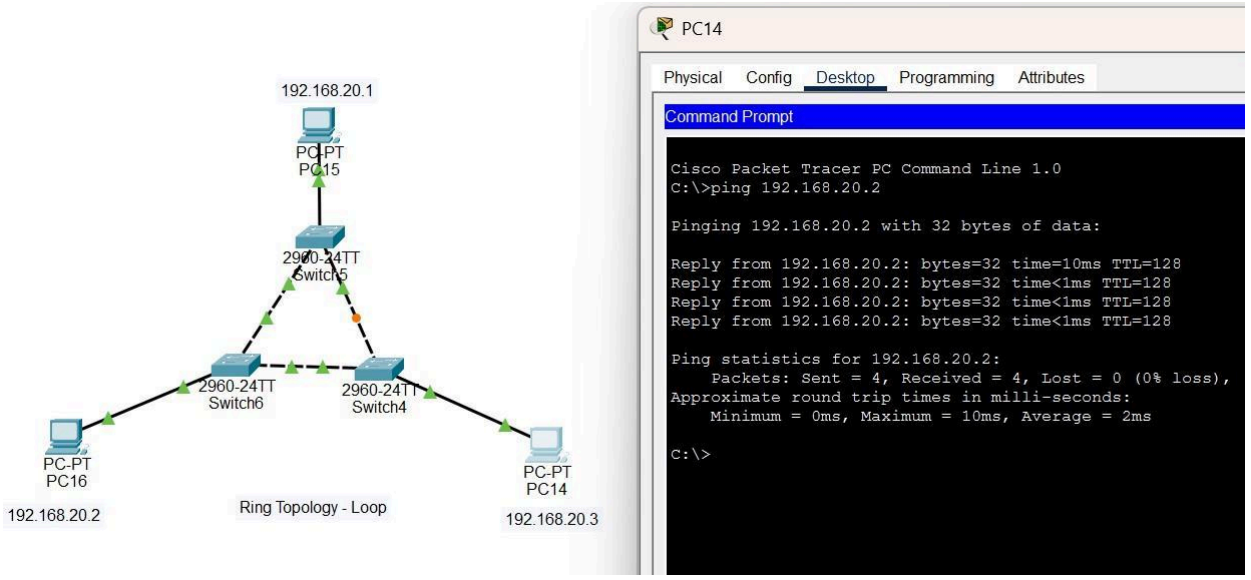

SIMULATION:

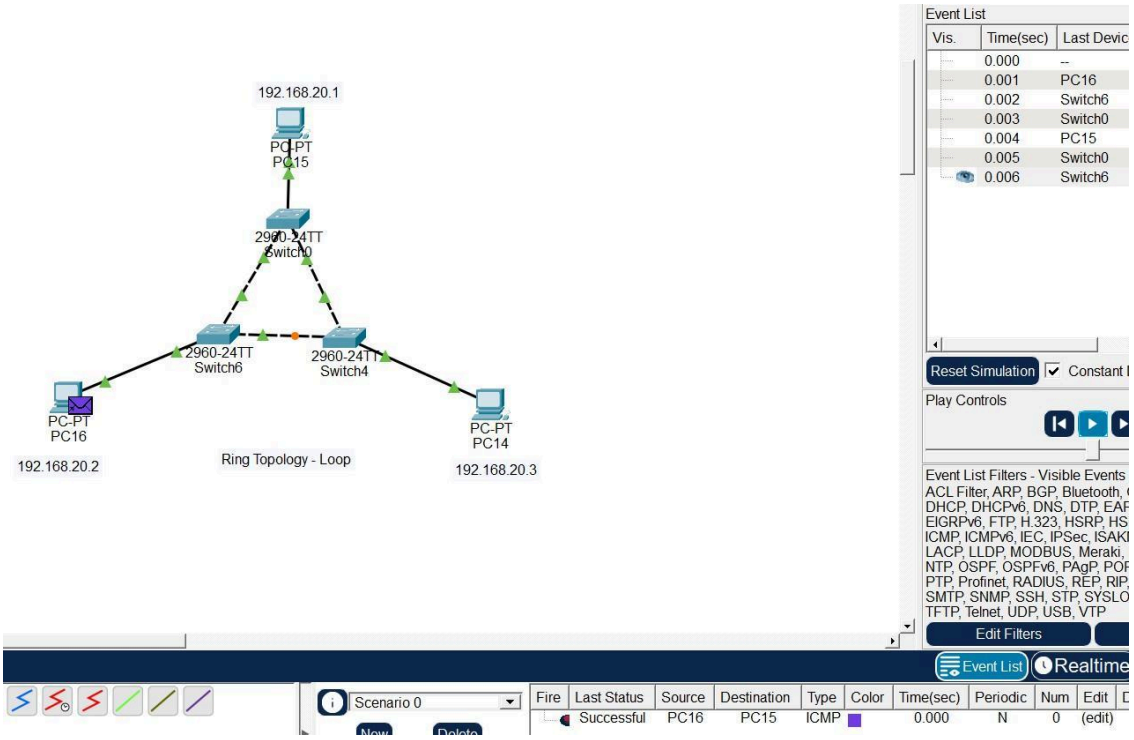

- **Behavior (Normal Working)**

Data packets travel through multiple switches in a circular path to reach the destination. ICMP ping between PCs is successful, showing that packets can reach the destination through either side of the loop.

- **Failure Behavior**

If one link in the ring fails, the loop is broken and communication may stop or take an alternate path depending on configuration. Without redundancy protocols, a single link failure can disrupt network communication.

- **Practical Applications (LAN Design)**

Ring or loop topologies are used in **metro networks, fiber rings, and backbone designs** where redundancy is required. They are suitable for controlled environments rather than small office LANs.

- **Conclusion**

Ring topology offers structured connectivity and potential redundancy but requires careful configuration. Due to its complexity, it is rarely used in small LANs and is mainly applied in backbone or specialized networks.

TASK 4: RING TOPOLOGY FAILURE TEST

TOPOLOGY:

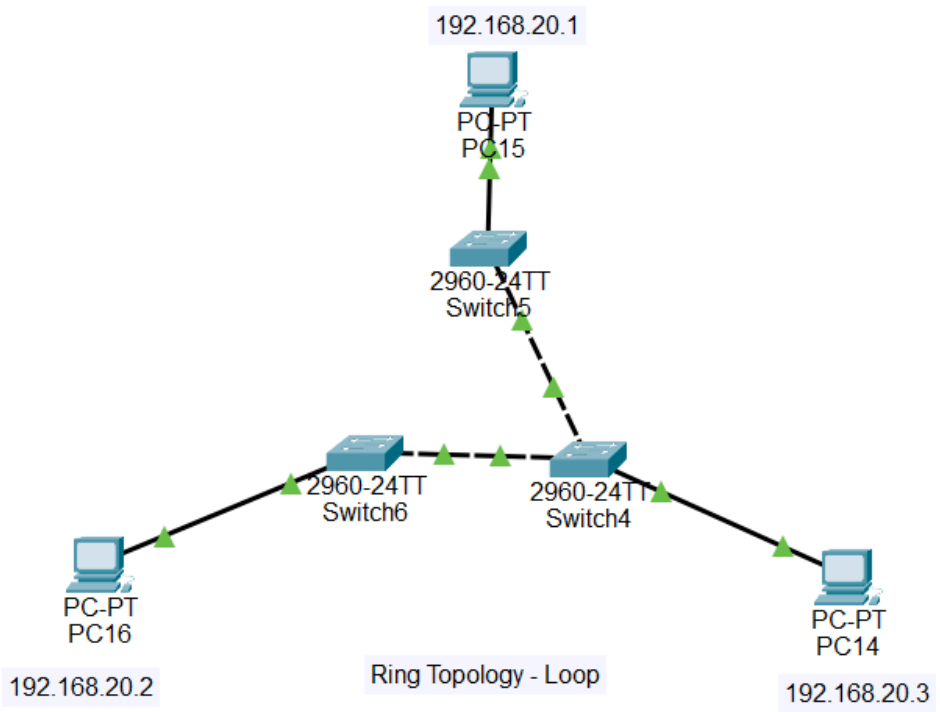

OUTPUT:

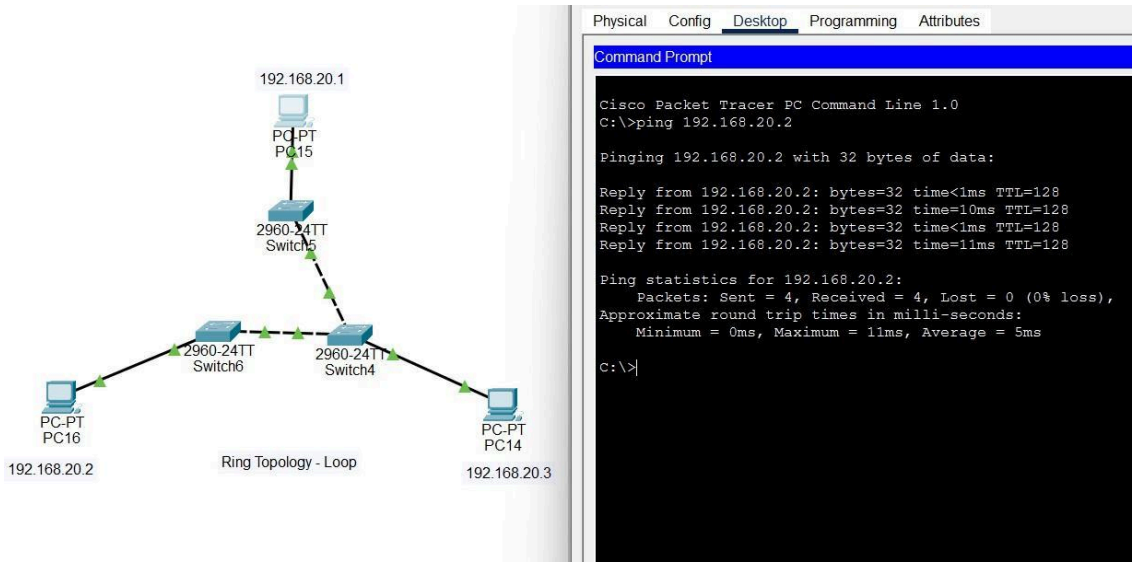

SIMULATION:

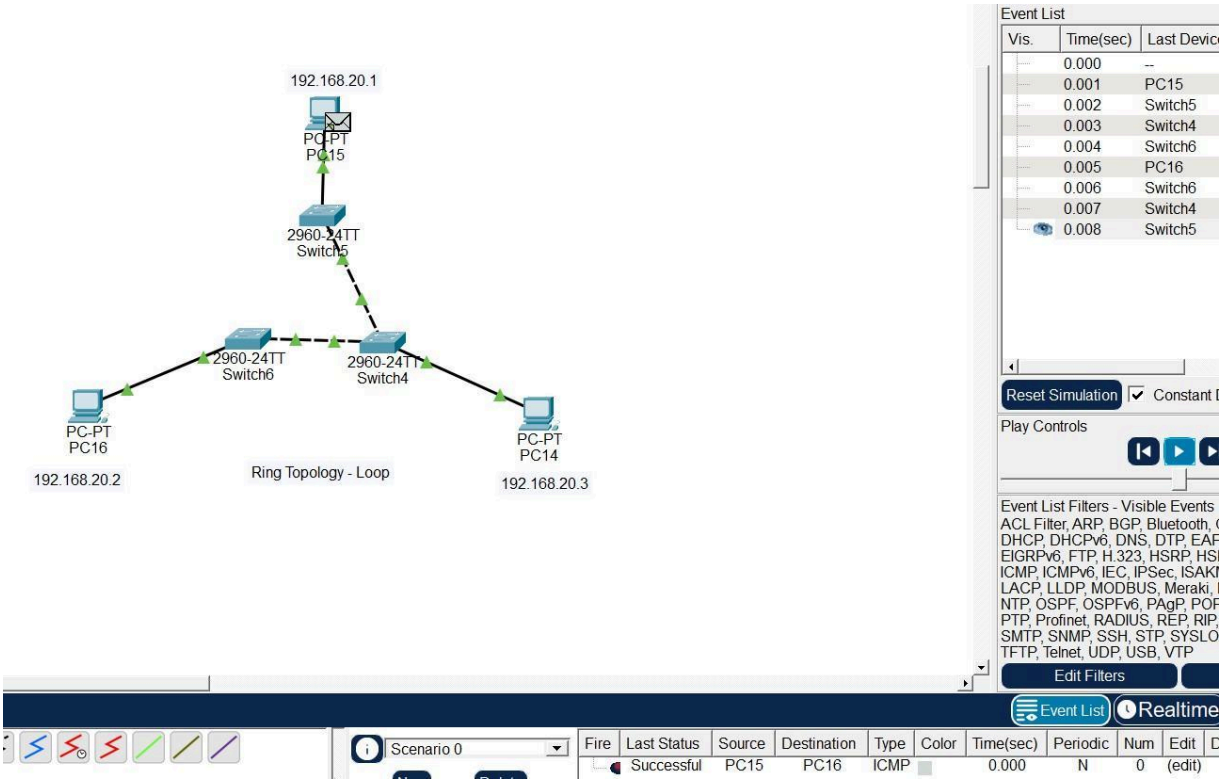

OBSERVATION:

Even after removing one connection in the ring topology, the packet is still delivered successfully by taking the remaining available path. This indicates that the topology provides limited fault tolerance, allowing communication to continue as long as at least one path exists between devices. However, the redundancy is reduced, and further link failures can completely disrupt the network.